BiX BIX SCREWDRIVER BITS

Screw nominal diameter and screw standard chart

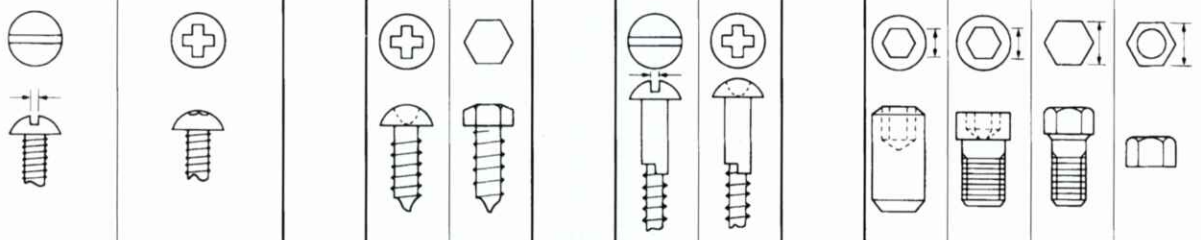

Screw nominal diameter (metric screws) 呼び径	Slotted small screw (Slotted recess thickness)	Slotted small screw for precision instruments (Slotted recess thickness)	Cross Point small screw Screw head number		Screw nominal diameter 呼び径	Cross Point tapping screw Screw head number	Hex tapping screw (includes those with flange) width across flats	Screw nominal diameter 呼び径	Slotted wood screw Slotted recess thickness	Cross Point wood screw Screw head number	Screw nominal diameter (metric screws) 呼び径	Hex recess stop screw width across flats	Hex recess bolt width across flats	Hex bolt (Small hex bolt) width across flats	Hex nut (Small 6 hex nut) width across flats
M1	0.32	0.32						1.6	0.4	–	M 2				4
M1.2	0.32	0.32						1.8	0.6	–	M 2.2				4.5
M1.4	0.32	0.32	No.0					2.1	0.6	No.1	M 2.3				
M1.6	0.4	0.32						2.4	0.7	No.1	M 2.5				5
M1.7	0.4	0.32	No.0					2.7	0.8	No.1	M 2.6				
M2	0.6	0.4	No.0	No.1	2	No.1		3.1	0.9	No.2	M 3	1.5	2.5	5.5	5.5
M2.2	0.6	0.4		No.1				3.5	1	No.2	M 3.5			6	6
M2.3	0.6	0.4	No.0	No.1				3.8	1	No.2	M 4	2	3	7	7
M2.5	0.8	0.6		No.1	2.5	No.1		4.1	1.2	No.2	M 4.5				8
M2.6	0.8	0.6	No.0	No.1				4.5	1.2	No.2	M 5	2.5	4	8	8
M3	0.8			※No.2	3	※No.2	5	4.8	1.3	No.2	M 6	3	5	10	10
M3.5	1			No.2	3.5	No.2	5.5	5.1	1.4	No.3	M 7			11	11
M4	1			No.2	4	No.2	7	5.5	1.4	No.3	M 8	4	6	13 (12)	13 (12)
M4.5	1			No.2	4.5	No.2	7	5.8	1.6	No.3	M10	5	8	17 (14)	17 (14)
M5	1.2			No.2	5	No.2	8	6.2	1.6	No.3	M12	6	10	19 (17)	19 (17)
M6	1.2			No.3	6	No.3	10	6.8	1.6	No.3	M14	6	12	22 (19)	22 (19)
M7								7.5	1.8	No.4	M16	8	14	24 (22)	24 (22)
M8	1.6			No.3	8		12	8	1.8	No.4	M18	8	14	27 (24)	27 (24)
								9.5	2	No.4	M20	10	17	30 (27)	30 (27)
Notes 備考	JIS B1101	JIS B1116	JCIS 10-70	JIS B1111 JIS B1122 ＊Truss is No.1	Notes 備考	JIS B1122 ＊Truss is No.1	JIS B1123 B type of the AB type hex tapping screw standards abridged	Notes 備考	JIS B1135	JIS B1112	Notes 備考	JIS B1177	JIS B1176	JIS B1180	JIS B1181

BiX Screwdriver bits

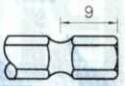

MODEL	EDP #	POINT SIZE	d×L1	Shank diameter	L	Equivalent to Vessel	Equivalent to Ohmi
B-15 6.35mm	B15150	No.1		H6.35	50	B-43	V-17W
	B15175				75		
	B151100				100		
	B15250	No.2			50		
	B15275				75		
	B152100				100		
	B152150				150		
	B152200				200		
	B152250				※250		
	B152300				※300		
	B15350	No.3			50		
	B15375				75		
	B153100				100		

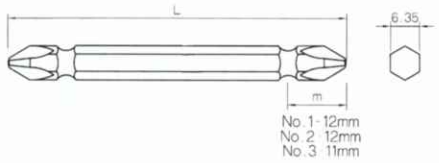

MODEL	EDP #	POINT SIZE	d×L1	Shank diameter	L	Equivalent to Vessel	Equivalent to Ohmi
B-35	B35150	No.1		φ7	50	B-35	V-17
	B35175				75		
	B351100				100		
	B351150				※150		
	B35250	No.2			50		
	B35275				75		
	B352100				100		
	B352150				150		
	B352200				※200		
	B35375	No.3			75		
	B353100				100		
	B353150				150		
	B353200				※200		
B-35M	B35M7075	−0.9t×7			75		V-17M
	B35M70100				100		

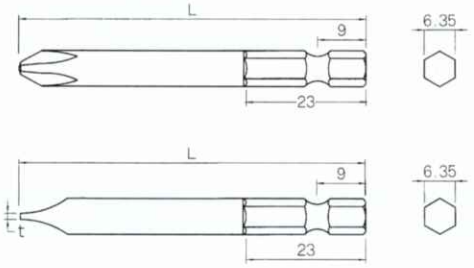

* shows non-standard products ※印は準標準品です。

MODEL	EDP #	POINT SIZE	d×L1	Shank diameter	L	Equivalent to Vessel	Equivalent to Ohmi
B-35D	B35D075	No.0	φ4.0×30	φ7	75	B-35	V-17
	B35D0100				100		
	B35D175	No.1			75		
	B35D1100				100		
	B35D275	No.2			75		
	B35D2100				100		

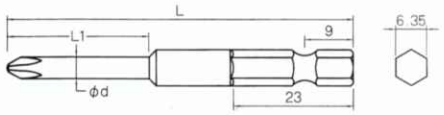

MODEL	EDP #	POINT SIZE	d×L1	Shank diameter	L	Equivalent to Vessel	Equivalent to Ohmi
B-35HS	B35HS175	(SQ1) 3/32"		H6.35	75		
	B35HS1100				100		
	B35HS275	(SQ2) 1/8"			75		
	B35HS2100				100		
	B35HS375	(SQ3) 9/64"			75		
	B35HS3100				100		

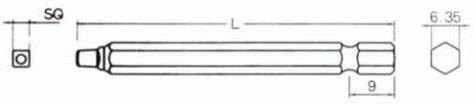

BiX Screwdriver bits

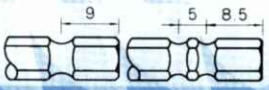

MODEL	EDP #	POINT SIZE	d×L1	Shank diameter	L	Equivalent to Vessel	Equivalent to Ohmi
B-35X 6.35mm	B35X1575	H1.5	ϕ3.0×30	ϕ7	75	B-35	
	B35X15100				100		
	B35X2075	H2	ϕ4.0×30		75		
	B35X20100				100		
	B35X2575	H2.5			75		
	B35X25100				100		
	B35X3075	H3			75		
	B35X30100				100		
	B35X4075	H4			75		
	B35X40100				100		
	B35X5075	H5			75		
	B35X50100				100		
	B35X6075	H6			75		
	B35X60100				100		

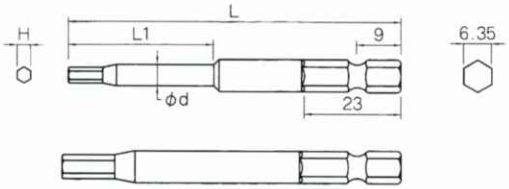

B-35H	B35H130	No.1		H6.35	30	B-39	
	B35H150				50		
	B35H175				75		
	B35H230	No.2			30		
	B35H250				50		
	B35H275				75		
	B35H330	No.3			30		
	B35H350				50		
	B35H375				75		
B-35HD	B35HD050	No.0	ϕ3.8×28	H6.35	50	B-35	
	B35HD150	No.1			50		
	B35HD250	No.2			50		
B-35HDM	B35HDM3850	−0.6t×3.8	ϕ3.8×28		50		
	B35HDM6050	−0.8t×6	ϕ6.0×28		50		
	B35HDM6075	−0.8t×6	ϕ6.0×50		75		
	B35HDM60100	−0.8t×6	ϕ6.0×70		100		

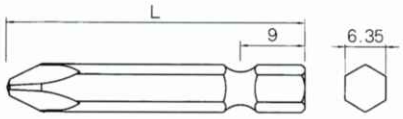

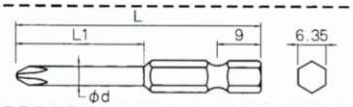

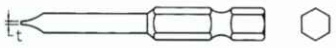

Double-grooved type (for B-35 and B-39)

B-37X	B37X1570	H1.5	ϕ3.0×30	ϕ7	70		V-32X
	B37X15100				100		
	B37X2070	H2	ϕ4.0×30		70		
	B37X20100				100		
	B37X2570	H2.5			70		
	B37X25100				100		
	B37X3070	H3			70		
	B37X30100				100		
	B37X4070	H4			70		
	B37X40100				100		
	B37X5070	H5			70		
	B37X50100				100		
	B37X6070	H6			70		
	B37X60100				100		

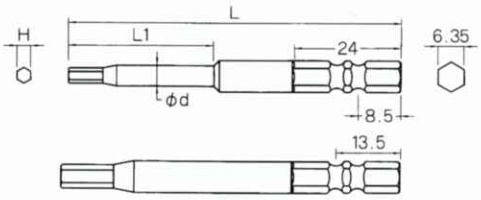

BiX Screwdriver bits

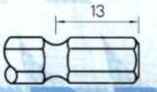

MODEL	EDP #	POINT SIZE	d×L1	Shank diameter	L	Equivalent to Vessel	Equivalent to Ohmi
B-12 6.35mm	B12145	No.1		H6.35	45	A-14	V-21W
	B12165				65		
	B12175				※75		
	B121110				110		
	B121150				150		
	B121200				200		
	B12245	No.2			45		
	B12265				65		
	B12275				※75		
	B122110				110		
	B122150				150		
	B122200				200		
	B122250				※250		
	B122300				※300		
	B12365	No.3			65		
	B12375				※75		
	B123110				110		
	B123150				150		
	B123200				※200		
B-39D	B39D075a	No.0		H6.35	75	D-81	V-21
	B39D175a	No.1	φ3.0×30				
	B39D275a	No.2					
	B39D182	No.1	φ5.0×35		82		
	B39D282	No.2					
	B39D175b	No.1	φ6		75		
	B39D275b	No.2					
B-39M	B39M6075	−0.8t×6	φ6		75	A-16	V-21M
	B39M8075	−1.0t×8	φ8				
B-39X	B39X2075	H2	φ4.0×30	H6.35	75	A-16	
	B39X20100				100		
	B39X2575	H2.5			75		
	B39X25100				100		
	B39X3075	H3			75		
	B39X30100				100		
	B39X4075	H4			75		
	B39X40100				100		
	B39X5075	H5			75		
	B39X50100				100		
	B39X6075	H6			75		
	B39X60100				100		
B-39S	B39S175	(SQ1)		H6.35	75	A-16	
	B39S1100	3/32"			100		
	B39S275	(SQ2)			75		
	B39S2100	1/8"			100		
	B39S375	(SQ3)			75		
	B39S3100	9/64"			100		

* shows non-standard products ※印は準標準品です。

BiX Screwdriver bits

MODEL	EDP #	POINT SIZE	dXL1	Shank diameter	L	Equivalent to Vessel	Equivalent to Ohmi
B-52 6.35mm	B52125	No.1		H6.35	25	B-33	V-27
	B52150				50		
	B52225	No.2			25		
	B52250				50		
	B52325	No.3			25		
	B52350				50		
B-52M	B52M6350	−0.8tX6.3			50		

Cordless driver bit

B-52C	B52C150	No.1		H6.35	50	D-85	
	B52C250	No.2			50		
	B52CM6350	−1.0tX6.3			50		

B-13 8mm	B13265	No.2		H8	65	A-15	V-24W
	B132100	(m=20)			100		
	B13365	No.3			65		
	B133100	(m=19)			100		
B-51 Impact type	B51236	No.2		H8	36	C-51	V-23
	B51280				80		
	B51336	No.3			36		
	B51380				80		
B-51M	B51M1080	−1.2tX10		ϕ10	80		

B-16 5mm	B16 070			H5	70	B-36	V-14W
	B16 0100				100		
	B16 0120	No.0			120		
	B16 0150				※150		
	B16 0200				※200		
	B16 170				70		
	B16 1100				100		
	B16 1120				120		
	B16 1150	No.1			150		
	B16 1200				※200		
	B16 1250				※250		
	B16 1300				※300		
	B16 270				70		
	B16 2100				100		
	B16 2120				120		
	B16 2150	No.2			150		
	B16 2200				200		
	B16 2250				※250		
	B16 2300				※300		

* shows non-standard products ※印は準標準品です。

BiX Screwdriver bits

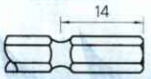

MODEL	EDP #	POINT SIZE	d×L1	Shank diameter	L	Equivalent to Vessel	Equivalent to Ohmi
B-31 5mm	B31050	No.0		φ6	※50	B-34	V-14
	B31070				70		
	B310100				100		
	B310120				120		
	B310150				※150		
	B310200				※200		
	B31150	No.1			※50		
	B31170				70		
	B311100				100		
	B311120				120		
	B311150				150		
	B311200				※200		
	B311250				※250		
	B311300				※300		
	B31250	No.2			※50		
	B31270				70		
	B312100				100		
	B312120				120		
	B312150				150		
	B312200				200		
	B312250				※250		
	B312300				※300		
B-31M	B31M6050	−0.8t×6			※50		V-14M
	B31M6070				70		
	B31M60100				100		

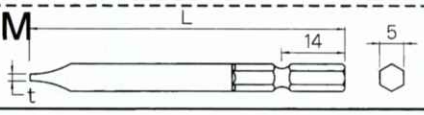

* shows non-standard products ※印は準標準品です。

B-31D	B31D070	No.0	φ3.0×30	φ6	70	B-34	V-14
	B31D0100				100		
	B31D170	No.1	φ4.0×30		70		
	B31D1100				100		
	B31D270	No.2	φ4.0×30		70		
	B31D2100				100		
	B31D2120				120		

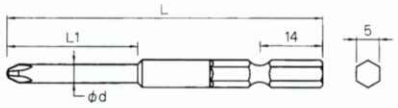

B-31X	B31X1570	H1.5	φ3.0×30	φ6	70	B-34	V-14X
	B31X15100				100		
	B31X2070	H2	φ4.0×30		70		
	B31X20100				100		
	B31X2570	H2.5			70		
	B31X25100				100		
	B31X3070	H3			70		
	B31X30100				100		
	B31X4070	H4			70		
	B31X40100				100		
	B31X5070	H5		H5	70		
	B31X50100				100		

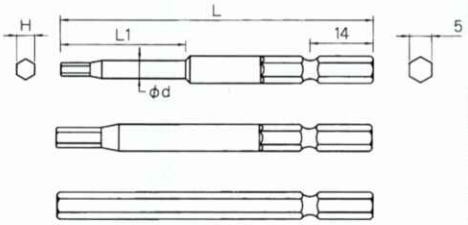

BiX Screwdriver bits (Hex lobe)

MODEL	EDP #	POINT SIZE	d×L1	Shank diameter	L	Equivalent to Vessel	Equivalent to Ohmi
B-31T 5mm	B31T0575	T5	φ2.0×15	φ6	75	NT	V-14T
	B31T05100				100		
	B31T0675	T6	φ2.5×15		75		
	B31T06100				100		
	B31T0875	T8	φ3.0×15		75		
	B31T08100				100		
	B31T1075	T10	φ3.6×15		75		
	B31T10100				100		
	B31T1575	T15	φ4.3×15		75		
	B31T15100				100		
	B31T2075	T20	φ5.0×15		75		
	B31T20100				100		
	B31T2575	T25	φ5.5×15		75		
	B31T25100				100		
B-35T 6.35mm	B35T0875	T8	φ3.0×15	φ7	75	JT	V-17T
	B35T08100				100		
	B35T1075	T10	φ3.6×15		75		
	B35T10100				100		
	B35T1575	T15	φ4.3×15		75		
	B35T15100				100		
	B35T2075	T20	φ5.0×15		75		
	B35T20100				100		
	B35T2575	T25	φ5.5×15		75		
	B35T25100				100		
	B35T2775	T27	φ6.0×15		75		
	B35T27100				100		
	B35T3075	T30	φ6.5×15		75		
	B35T30100				100		
	B35T4075	T40	φ7.0		75		
	B35T40100				100		
B-39T 6.35mm	B39T0865	T8	φ3.0×15	H6.35	65	VT	V-21T
	B39T08110				110		
	B39T1065	T10	φ3.6×15		65		
	B39T10110				110		
	B39T1565	T15	φ4.3×15		65		
	B39T15110				110		
	B39T2065	T20	φ5.0×15		65		
	B39T20110				110		
	B39T2565	T25	φ5.5×15		65		
	B39T25110				110		
	B39T2765	T27	φ6.0×15		65		
	B39T27110				110		
	B39T3065	T30	φ6.5×15		65		
	B39T30110				110		
	B39T4065	T40	φ7.0×15		65		
	B39T40110				110		

* Tamper resistance available upon request ※ご要望に応じイジリ止メ付きについても対応致します。

BiX Screwdriver bits (Hex lobe)

MODEL	EDP #	POINT SIZE	d×L1	Shank diameter	L	Equivalent to Vessel	Equivalent to Ohmi
B-51T 8mm	B51T2565	T25	ϕ5.5×15	8H	65	V-5	V-24T
	B51T25110				110		
	B51T3065	T30	ϕ6.5×15		65		
	B51T30110				110		
	B51T4065	T40	ϕ7.0×15		65		
	B51T40110				110		
	B51T4565	T45	ϕ8.0×15		65		
	B51T45110				110		
	B51T5065	T50			65		
	B51T50110				110		

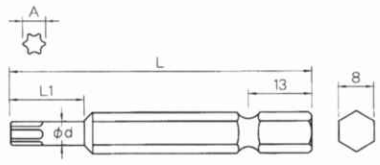

* Tamper resistance available upon request ※ご要望に応じイジリ止メ付きについても対応致します。

BiX Screw tightening robot bits

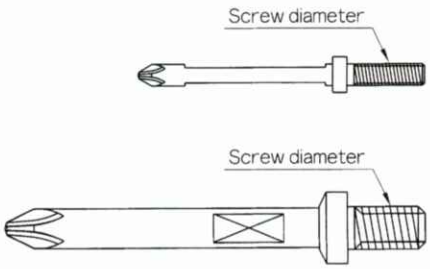

We can manufacture robot bits if provided with drawings and sizes

図面、サイズなどご指示頂ければロボットビットの製作も承ります。

BiX Bit holders

MODEL	EDP #	POINT SIZE	d×L1	Shank diameter	L	Equivalent to Vessel	Equivalent to Ohmi
B-35BH 6.35mm	B35BH6375	H6.35	ϕ11	H6.35	75	HB	

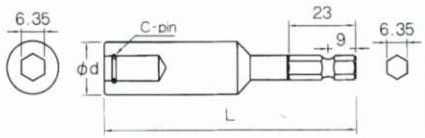

Including magnet

B-35MH	B35MH6375	H6.35	ϕ11	H6.35	75	HBM	
B-39MH	B39MH6375	H6.35	ϕ11	H6.35	75	HAM	

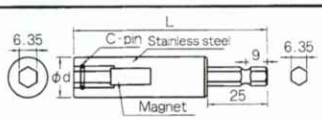

BiX Small electric driver bits

MODEL	EDP #	POINT SIZE	d×L1	Shank diameter	L	Equivalent to Vessel	Equivalent to Ohmi
BD-4 4mm	BD40012 (L)	No.00	φ1.2×20	φ4	44・64	D-71	V-05
	BD40015 (L)		φ1.5×20		44・64		
	BD40017 (L)		※φ1.7×20		44・64		
	BD40020 (L)		φ2.0×20		44・64		
	BD4012 (L)	No.0	φ1.2×20		44・64		
	BD4015 (L)		φ1.5×20		44・64		
	BD4017 (L)		※φ1.7×20		44・64		
	BD4020 (L)		φ2.0×20		44・64		
	BD4023 (L)		※φ2.3×20		44・64		
	BD4025 (L)		φ2.5×20		44・64		
	BD4030 (L)		φ3.0×20		44・64		
	BD4040 (L)		φ4.0		44・64		
	BD4130 (L)	No.1	φ3.0×20		44・64		
	BD4140 (L)		φ4.0		44・64		
BD-4M	BD4240 (L)	No.2	φ4.0		44・64		
	BD4M20 (L)	−0.3t×2.0	φ2.0×20		44・64		
	BD4M25 (L)	−0.3t×2.5	φ2.5×20		44・64		
	BD4M30 (L)	−0.4t×3.0	φ3.0×20		44・64		
	BD4M40 (L)	−0.5t×4.0	φ4.0×20		44・64		
BD-4X	BD4X15 (L)	H1.5	φ3.0×20	φ4	44・64	D-71	
	BD4X20 (L)	H2.0	φ3.0×20		44・64		
	BD4X25 (L)	H2.5	φ3.0×20		44・64		
	BD4X30 (L)	H3	φ4.0		44・64		
	BD4X40 (L)	H4	φ5.0		※44・64		
BH-4V 4mm	B4V0012 (L)	No.00	φ1.2×20	φ4	40・60	D-73	BP (HIOS)
	B4V0015 (L)		φ1.5×20		40・60		
	B4V0017 (L)		※φ1.7×20		40・60		
	B4V0020 (L)		φ2.0×20		40・60		
	B4V012 (L)	No.0	φ1.2×20		40・60		
	B4V015 (L)		φ1.5×20		40・60		
	B4V017 (L)		※φ1.7×20		40・60		
	B4V020 (L)		φ2.0×20		40・60		
	B4V023 (L)		※φ2.3×20		40・60		
	B4V025 (L)		φ2.5×20		40・60		
	B4V030 (L)		φ3.0×20		40・60		
	B4V040 (L)		φ4.0		40・60		
	B4V130 (L)	No.1	φ3.0×20		40・60		
	B4V140 (L)		φ4.0		40・60		
	B4V240 (L)	No.2	φ4.0		40・60		
BH-4VM							
	B4VM20 (L)	−0.3t×2.0	φ2.0×20	φ4	40・60		
	B4VM25 (L)	−0.3t×2.5	φ2.5×20		40・60		
	B4VM30 (L)	−0.4t×3.0	φ3.0×20		40・60		
	B4VM40 (L)	−0.5t×4.0	φ4.0×20		40・60		

(No. 00 follows our in-house standards)
(No.00については、弊社規格です。)

※shows non-standard products
※印は準標準品です。

BiX Small electric driver bits

MODEL	EDP #	POINT SIZE	d×L1	Shank diameter	L	Equivalent to Vessel	Equivalent to HIOS
BH-4VX 4mm	B4VX15 (L)	H1.5	ϕ3.0×20	ϕ4	40・60	D-73	BH
	B4VX20 (L)	H2.0	ϕ3.0×20		40・60		
	B4VX25 (L)	H2.5	ϕ3.0×20		40・60		
	B4VX30 (L)	H3	ϕ4		40・60		
	B4VX40 (L)	H4	ϕ5.0		※40・60		

MODEL	EDP #	POINT SIZE	d×L1	Shank diameter	L	Equivalent to Vessel	Equivalent to HIOS
BH-5V 5mm	B5V020 (L)	No.0	ϕ2.0×20	ϕ5	60・80	D-76	BP
	B5V025 (L)		ϕ2.5×20		60・80		
	B5V030 (L)		ϕ3.0×20		60・80		
	B5V050 (L)		ϕ5.0		60・80		
	B5V130 (L)	No.1	ϕ3.0×20		60・80		
	B5V150 (L)		ϕ5.0		60・80		
	B5V250 (L)	No.2	ϕ5.0		60・80		
BH-5VM	B5VM20 (L)	−0.3t×2.0	ϕ2.0×20		60・80		BS
	B5VM25 (L)	−0.3t×2.5	ϕ2.5×20		60・80		
	B5VM30 (L)	−0.4t×3.0	ϕ3.0×20		60・80		
	B5VM40 (L)	−0.5t×4.0	ϕ4.0×20		60・80		
	B5VM50 (L)	−0.6t×5.0	ϕ5.0×20		60・80		

MODEL	EDP #	POINT SIZE	d×L1	Shank diameter	L	Equivalent to Vessel	Equivalent to HIOS
BH-5VX	B5VX15 (L)	H1.5	ϕ3.0×20	ϕ5	60・80	D-76	BH
	B5VX20 (L)	H2.0	ϕ3.0×20		60・80		
	B5VX25 (L)	H2.5	ϕ3.0×20		60・80		
	B5VX30 (L)	H3	ϕ4.0×20		60・80		
	B5VX40 (L)	H4	ϕ5		60・80		
	B5VX50 (L)	H5	ϕ6.0		※60・80		

* We can also manufacture products longer than 80mm total length.
※全長80mm以上の製品も製作致します。

MODEL	EDP #	POINT SIZE	d×L1	Shank diameter	L	Equivalent to Vessel	Equivalent to Ohmi
B-10 3mm	B10020 (L)	No.0	ϕ2.0×15	ϕ3	31・36・50	A-7	V-01
	B10025 (L)		ϕ2.5×15		31・36・50		
	B10030 (L)		ϕ3		31・36・50		
	B10120 (L)	No.1	ϕ2.0×15		31・36・50		
	B10125 (L)		ϕ2.5×15		31・36・50		
	B10130 (L)		ϕ3		31・36・50		
B-10M	B10M30 (L)	−0.35t×3	ϕ3		21・40		V-01M

(Please inquire about above models before ordering.)
(このモデルはその都度お問い合わせください。)

* shows non-standard products
※印は準標準品です。

BiX Small electric driver bits (Hex lobe)

BD-4 4mm

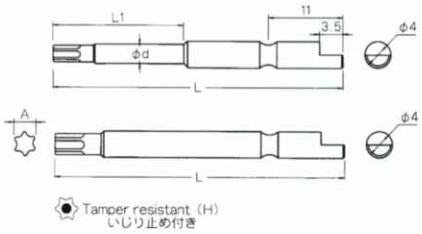

MODEL	EDP #	POINT SIZE	d×L1	Shank diameter	L	Equivalent to Vessel	Equivalent to Ohmi
BD-4 4mm	BD4T1 (L)	T1	φ1.3×15	φ4	44・64	D-71	V-05T
	BD4T2 (L)	T2	φ1.5×15		44・64		
	BD4T3 (L)	T3	φ1.7×20		44・64		
	BD4T4 (L)	T4	φ1.8×20		44・64		
	BD4T5 (L)	T5	φ2.0×20		44・64		
	BD4T6 (L)	T6	φ2.5×20		44・64		
	BD4T8 (L)	T8	φ3.0×20		44・64		
	BD4T10 (L)	T10	φ3.0×20		44・64		
	BD4T15 (L)	T15	φ4.0		44・64		
	BD4T8H (L)	T8H	φ3.0×20		44・64		
	BD4T10H (L)	T10H	φ3.0×20		44・64		
	BD4T15H (L)	T15H	φ4.0		44・64		

BH-4VT 4mm

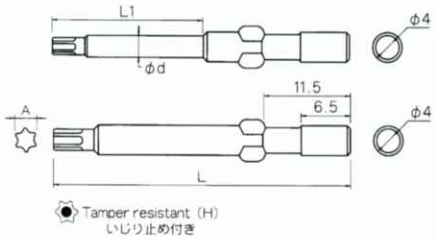

MODEL	EDP #	POINT SIZE	d×L1	Shank diameter	L	Equivalent to Vessel	Equivalent to Ohmi
BH-4VT 4mm	B4VT1 (L)	T1	φ1.3×15	φ4	40・60	D-73	
	B4VT2 (L)	T2	φ1.5×15		40・60		
	B4VT3 (L)	T3	φ1.7×20		40・60		
	B4VT4 (L)	T4	φ1.8×20		40・60		
	B4VT5 (L)	T5	φ2.0×20		40・60		
	B4VT6 (L)	T6	φ2.5×20		40・60		
	B4VT8 (L)	T8	φ3.0×20		40・60		
	B4VT10 (L)	T10	φ3.0×20		40・60		
	B4VT15 (L)	T15	φ4.0		40・60		
	B4VT8H (L)	T8H	φ3.0×20		40・60		
	B4VT10H (L)	T10H	φ3.0×20		40・60		
	B4VT15H (L)	T15H	φ4.0		40・60		

BH-5VT 5mm

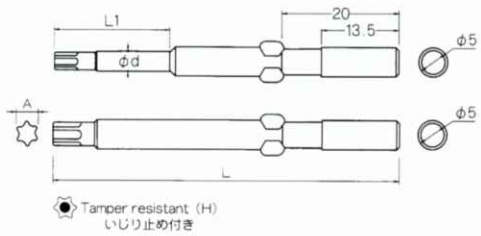

MODEL	EDP #	POINT SIZE	d×L1	Shank diameter	L	Equivalent to Vessel	Equivalent to Ohmi
BH-5VT 5mm	B5VT5 (L)	T5	φ2.0×20	φ5	60・80	D-76	
	B5VT6 (L)	T6	φ2.5×20		60・80		
	B5VT8 (L)	T8	φ3.0×20		60・80		
	B5VT10 (L)	T10	φ3.0×20		60・80		
	B5VT15 (L)	T15	φ4.0×20		60・80		
	B5VT8H (L)	T8H	φ3.0×20		60・80		
	B5VT10H (L)	T10H	φ3.0×20		60・80		
	B5VT15H (L)	T15H	φ4.0×20		60・80		

* We can also manufacture products longer than 80mm total length.
※全長80mm以上の製品も製作致します。

BiX Small electric driver socket bits

BD-4B 4mm

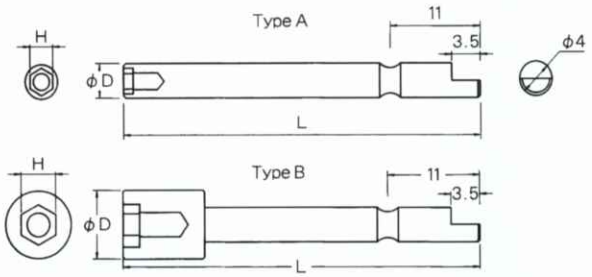

BD-4BM

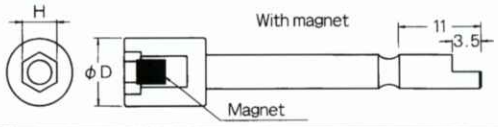

MODEL	EDP #	Hex opening(H)	O/D	L	Type
BD-4B 4mm	4DB2344	2.3	4	44	A
	4DB2364	2.3	4	64	A
	4DB2544	2.5	4	44	A
	4DB2564	2.5	4	64	A
	4DB0344	3	5	44	B
	4DB0364	3	5	64	B
	4DB0444	4	6	44	B
	4DB0464	4	6	64	B
	4DB4544	4.5	7	44	B
	4DB4564	4.5	7	64	B
	4DB0544	5	7	44	B
	4DB0564	5	7	64	B
	4DB5544	5.5	8	44	B
	4DB5564	5.5	8	64	B
BD-4BM	4DBM0464	4	6	64	with Mg
	4DBM0564	5	7	64	with Mg
	4DBM5564	5.5	8	64	with Mg

BH-4VB 4mm

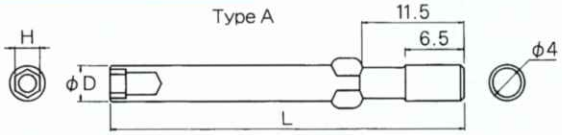

BH-4VBM

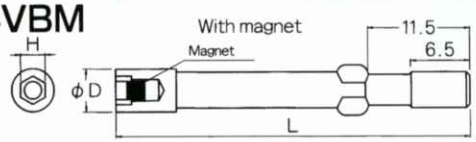

BH-5VB 5mm

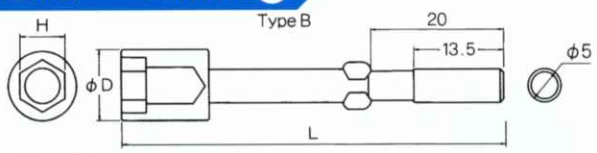

BD-5VBM

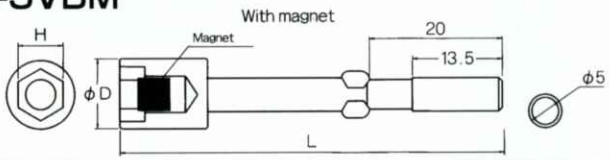

MODEL	EDP #	Hex opening(H)	O/D	L	Type
BH-4VB 4mm	4VB2340	2.3	4	40	A(ϕ4)
	4VB2540	2.5	4	40	A(ϕ4)
	4VB0360	3	5	60	B (ϕ4)
	4VB0460	4	6	60	B (ϕ4)
	4VB4560	4.5	7	60	B (ϕ4)
	4VB0560	5	7	60	B (ϕ4)
	4VB5560	5.5	8	60	B (ϕ4)
BH-4VBM	4VBM0460	4	6	60	with Mg
	4VBM0560	5	7	60	with Mg
	4VBM5560	5.5	8	60	with Mg
BH-5VB 5mm	5VB0460	4	7	60	B (ϕ5)
	5VB4560	4.5	7	60	B (ϕ5)
	5VB0560	5	8	60	B (ϕ5)
	5VB5560	5.5	9	60	B (ϕ5)
	5VB0660	6	10	60	B (ϕ5)
	5VB0760	7	11	60	B (ϕ5)
BD-5VBM	5VBM0460	4	7	60	with Mg
	5VBM0560	5	8	60	with Mg
	5VBM5560	5.5	9	60	with Mg
	5VBM0660	6	10	60	with Mg
	5VBM0760	7	11	60	with Mg

BiX Socket bits

MODEL	EDP #	Hex opening (H)	O/D	L	Notes
B-35B 6.35mm	35B0555	5	8	55	
	35B0570	5	8	70	
	35B5555	5.5	9	55	
	35B5570	5.5	9	70	
	35B55100	5.5	9	100	
	35B0655	6	10	55	
	35B0670	6	10	70	
	35B06100	6	10	100	
	35B0755	7	11	55	
	35B0770	7	11	70	
	35B07100	7	11	100	
	35B0855	8	13	55	
	35B0870	8	13	70	
	35B08100	8	13	100	
	35B08150	8	13	150	
	35B1055	10	16	55	
	35B1070	10	16	70	
	35B10100	10	16	100	
	35B10150	10	16	150	
	35B1255	12	18	55	
	35B1270	12	18	70	
	35B12100	12	18	100	
	35B12150	12	18	150	
	35B1370	13	19	70	
	35B13100	13	19	100	
	35B1470	14	20	70	
	35B14100	14	20	100	
	35B14150	14	20	150	

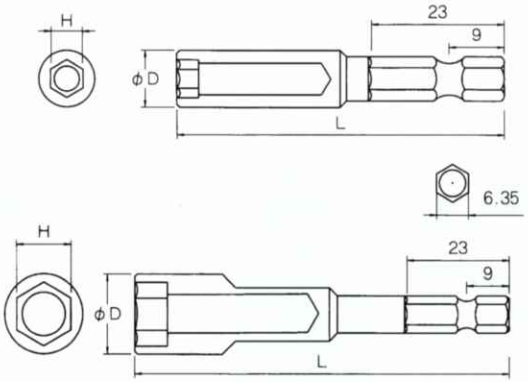

* We can also manufacture products longer than 200mm upon request.
※ご要望に応じL200mm以上の製品も製作致します。

MODEL	EDP #	Hex opening (H)	O/D	L	Notes
B-35B 6.35mm	35B0532	5	8	32	
	35B5532	5.5	9	32	
	35B0632	6	10	32	
	35B0732	7	11	32	
	35B0832	8	13	32	
	35B0932	9	13	32	
	35B1032	10	16	32	
	35B1232	12	18	32	

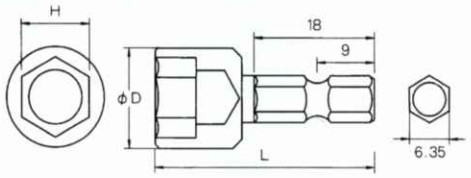

BiX Socket bits

Hex lobe

MODEL	EDP #	A dimensions	O/D	L	Notes
B-35BE 6.35mm	35BE0470	3.8 (E4)	7	70	
	35BE0570	4.7 (E5)	8	70	
	35BE0670	5.7 (E6)	10	70	
	35BE0870	7.5 (E8)	12	70	
	35BE1070	9.4 (E10)	14	70	

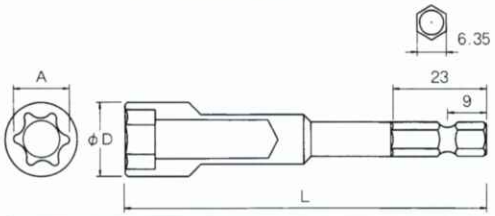

B-35 and B-39 dual-use type "Double-groove"

MODEL	EDP #	Hex opening (H)	O/D	L	Notes
B-37BW 6.35mm	37BW0555	5	8	55	
	37BW0570	5	8	70	
	37BW5555	5.5	9	55	
	37BW5570	5.5	9	70	
	37BW55100	5.5	9	100	
	37BW0655	6	10	55	
	37BW0670	6	10	70	
	37BW06100	6	10	100	
	37BW0755	7	11	55	
	37BW0770	7	11	70	
	37BW07100	7	11	100	
	37BW0855	8	13	55	
	37BW0870	8	13	70	
	37BW08100	8	13	100	
	37BW08150	8	13	150	
	37BW1055	10	16	55	
	37BW1070	10	16	70	
	37BW10100	10	16	100	
	37BW10150	10	16	150	
	37BW1255	12	18	55	
	37BW1270	12	18	70	
	37BW12100	12	18	100	
	37BW12150	12	18	150	
	37BW1370	13	19	70	
	37BW13100	13	19	100	
	37BW1470	14	20	70	
	37BW14100	14	20	100	
	37BW14150	14	20	150	

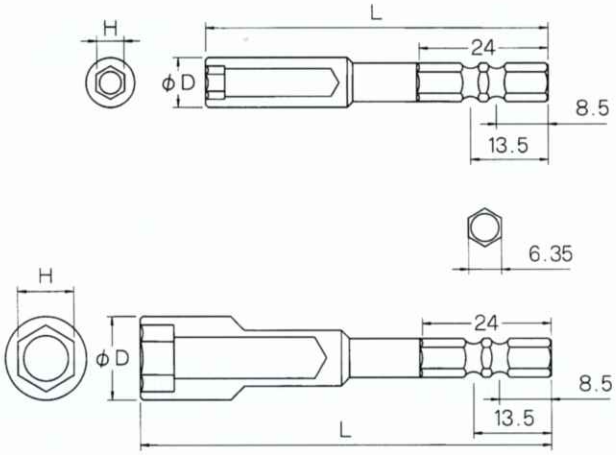

* We can also manufacture products longer than 200mm upon request.
※ご要望に応じL200以上の製品も製作致します。

BiX Socket bits

B-39B 6.35mm

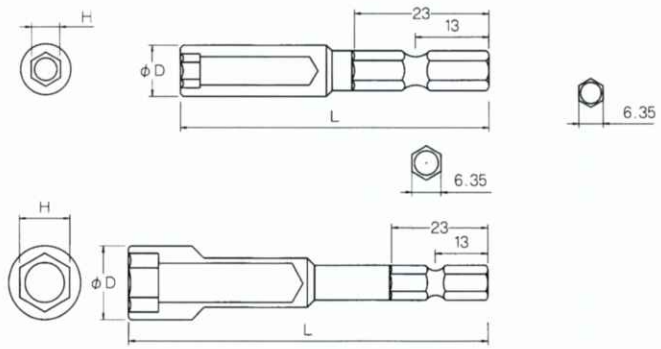

MODEL	EDP #	Hex opening (H)	O/D	Total length L	Notes
B-39B 6.35mm	39B0555	5	8	55	
	39B5555	5.5	9	55	
	39B0655	6	10	55	
	39B0755	7	11	55	
	39B07100	7	11	100	
	39B0855	8	13	55	
	39B0870	8	13	70	
	39B08100	8	13	100	
	39B1055	10	16	55	
	39B1070	10	16	70	
	39B10100	10	16	100	
	39B10150	10	16	150	
	39B1255	12	18	55	
	39B1270	12	18	70	
	39B12100	12	18	100	
	39B12150	12	18	150	
	39B1355	13	19	55	
	39B13100	13	19	100	
	39B1455	14	20	55	
	39B14100	14	20	100	
	39B1755	17	25	55	
	39B17100	17	25	100	

* We can also manufacture products longer than 200mm upon request.
※ご要望に応じL200以上の製品も製作致します。

B-51B 8mm

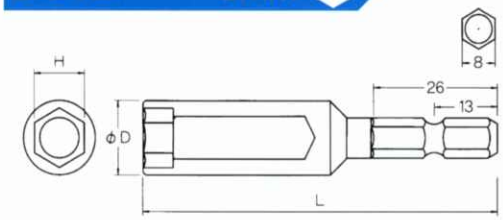

MODEL	EDP #	Hex opening (H)	O/D	L	Notes
B-51B 8mm	51B10100	10	16	100	
	51B12100	12	18	100	
	51B14100	14	20	100	
	51B17100	17	26	100	

BiX Socket bits

MODEL	EDP #	Hex opening (H)	O/D	L	Notes
B-31B 5mm	31B0470	4	7	70	
	31B4570	4.5	7	70	
	31B0570	5	8	70	
	31B5570	5.5	9	70	
	31B55100	5.5	9	100	
	31B0670	6	10	70	
	31B06100	6	10	100	
	31B0770	7	11	70	
	31B07100	7	11	100	
	31B0870	8	13	70	
	31B08100	8	13	100	
	31B08150	8	13	150	
	31B0970	9	13	70	
	31B09100	9	13	100	
	31B1070	10	16	70	
	31B10100	10	16	100	
	31B10150	10	16	150	
	31B1170	11	16	70	
	31B11100	11	16	100	
	31B1270	12	18	70	
	31B12100	12	18	100	
	31B12150	12	18	150	
	31B1370	13	19	70	
	31B13100	13	19	100	
	31B1470	14	20	70	
	31B14100	14	20	100	
	31B14150	14	20	150	

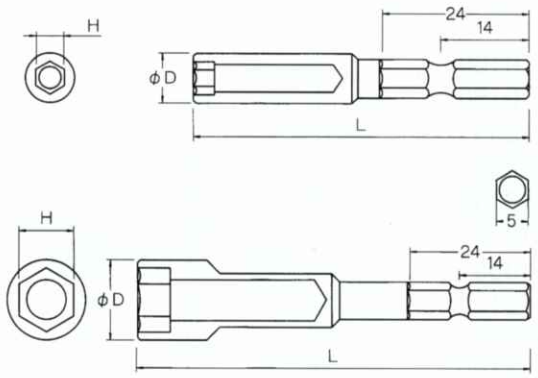

* We can also manufacture products longer than 200mm upon request.
※ご要望に応じL200mm以上の製品も製作致します。

BiX Universal socket bits

B-35BU 6.35mm

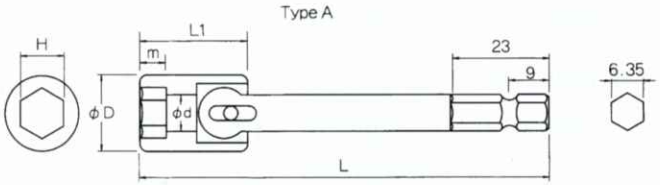

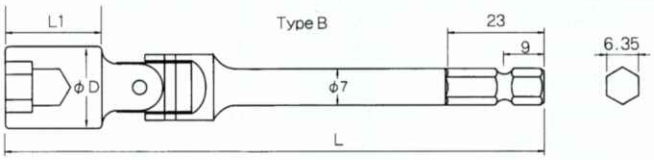

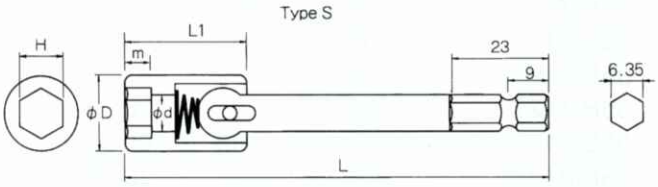

MODEL	EDP #	Hex opening (H)	O/D	L	Type
	35BU08100A	8		100	A
	35BU08150A	8		150	A
	35BU08200A	8		200	A
	35BU10100A	10		100	A
	35BU10150A	10		150	A
	35BU10200A	10		200	A
	35BU12100A	12		100	A
	35BU12150A	12		150	A
	35BU12200A	12		200	A
	35BU14100A	14		100	A
	35BU14150A	14		150	A
	35BU14200A	14		200	A
	35BU08100B	8		100	B
	35BU08150B	8		150	B
	35BU08200B	8		200	B
	35BU10100B	10		100	B
	35BU10150B	10		150	B
	35BU10200B	10		200	B
	35BU12100B	12		100	B
	35BU12150B	12		150	B
	35BU12200B	12		200	B
	35BU14100B	14		100	B
	35BU14150B	14		150	B
	35BU14200B	14		200	B
	35BU08100S	8		100	S
	35BU08150S	8		150	S
	35BU08200S	8		200	S
	35BU10100S	10		100	S
	35BU10150S	10		150	S
	35BU10200S	10		200	S
	35BU12100S	12		100	S
	35BU12150S	12		150	S
	35BU12200S	12		200	S
	35BU14100S	14		100	S
	35BU14150S	14		150	S
	35BU14200S	14		200	S

* We can also manufacture products longer than 200mm upon request.
※ご要望に応じL200以上の製品も製作致します。

BiX Socket bits with Magnet

Press-in magnets

B-31BM 5mm

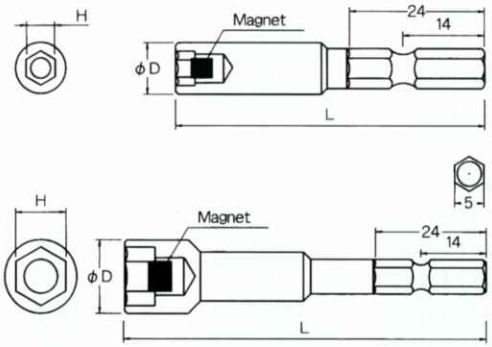

MODEL	EDP #	Hex opening (H)	O/D	L	Notes
B-31BM 5mm	31BM0570	5	8	70	
	31BM5570	5.5	9	70	
	31BM0670	6	10	70	
	31BM0770	7	11	70	
	31BM08100	8	13	100	
	31BM10100	10	16	100	
	31BM12100	12	18	100	
	31BM13100	13	19	100	

B-35BM 6.35mm

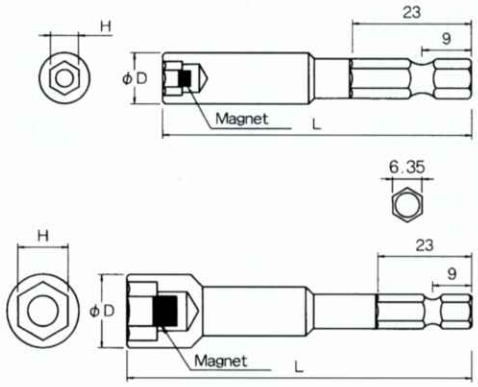

MODEL	EDP #	Hex opening (H)	O/D	L	Notes
B-35BM 6.35mm	35BM5570	5.5	9	70	
	35BM55100	5.5	9	100	
	35BM0670	6	10	70	
	35BM06100	6	10	100	
	35BM0755	7	11	55	
	35BM0770	7	11	70	
	35BM07100	7	11	100	
	35BM0855	8	13	55	
	35BM0870	8	13	70	
	35BM08100	8	13	100	
	35BM1055	10	16	55	
	35BM1070	10	16	70	
	35BM10100	10	16	100	
	35BM1255	12	18	55	
	35BM1270	12	18	70	
	35BM12100	12	18	100	
	35BM1470	14	20	70	
	35BM14100	14	20	100	

B-39BM 6.35mm

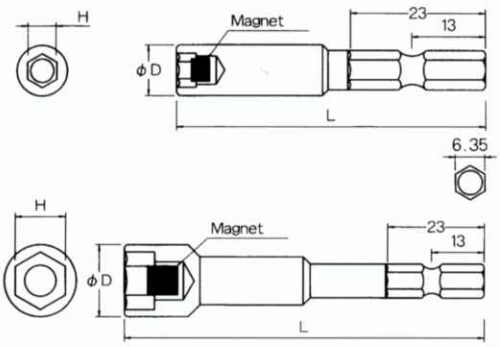

MODEL	EDP #	Hex opening (H)	O/D	L	Notes
B-39BM 6.35mm	39BM0755	7	11	55	
	39BM07100	7	11	100	
	39BM0855	8	13	55	
	39BM08100	8	13	100	
	39BM1055	10	16	55	
	39BM10100	10	16	100	
	39BM1255	12	18	55	
	39BM12100	12	18	100	